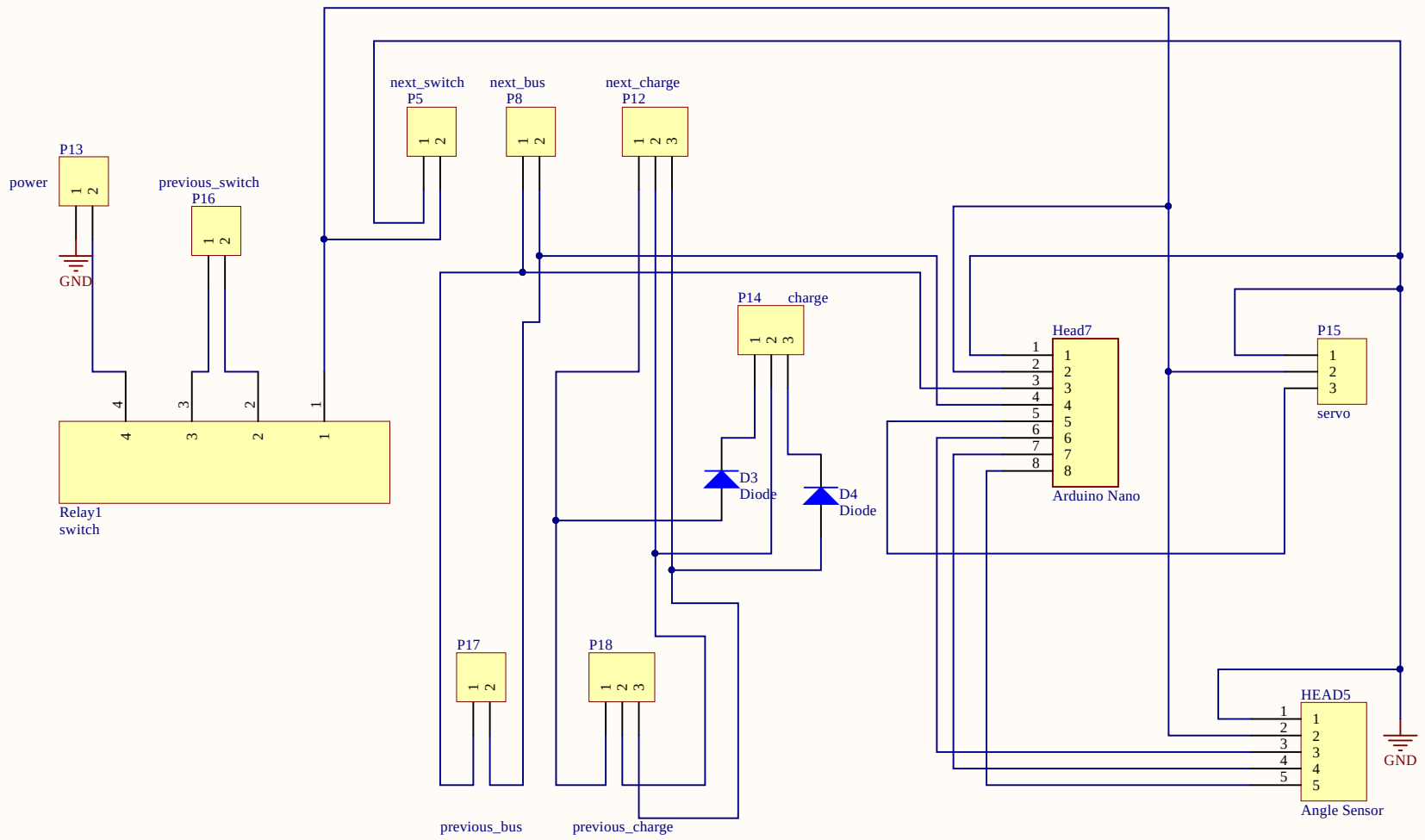

Title		
Size A4	Number	Revision
Date: 2015/12/4		Sheet of
File: F:\Dropbox\..\Sheet2.SchDoc		Drawn By:

Board St